Operation and Setting

1. Machine On : All functions and signs on the screen are shown.
Then according to each model to display its functions,
cold and hot temperature, soda, and the other datas.

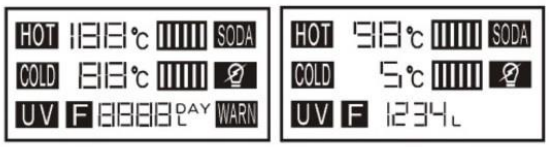

2. Descriptions

HOT Hot water in use.
The 98℃ next to it is the hot water temperature. When heating the water, the color bar flashes

COLD Cold water in use.
The 5℃ next to it is the cold water temperature. When chilling the water, the color bar flashes.

UV UV in use.

Flow Meter: Showing how many liters of water have been produced.
F 6789 L stands for 6789 liters have been produced.

Day Counter: Showing how many days the filters have been used.
F 0256 Day meaning the filters have been used for 256 days.

Energy saving in use.

SODA Soda in use. (If no hot water, soda and its temperature appear on the first row.)

WARN Warning for machine errors.

3. Setting

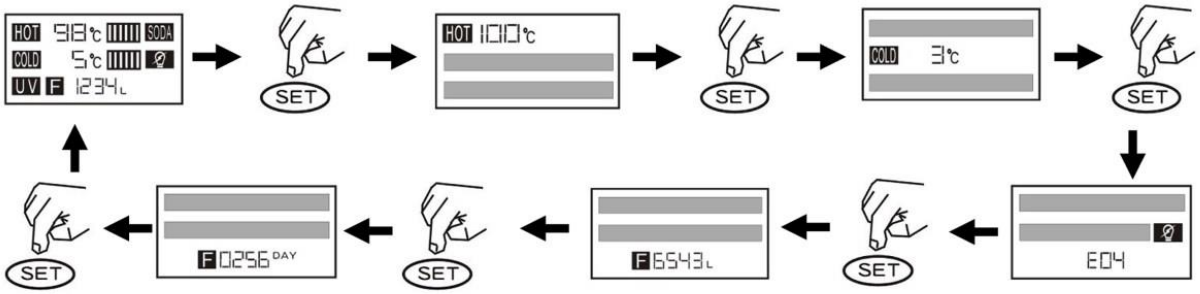

To adjust hot water temperature, press set one time to indicate current hot water temperature. Press set again and hold for 3 seconds, the temperature may be changed from 80 to 100℃. Default setting is 100. To complete setting, press set and hold for for 3 seconds. If no button is pressed, the unit saves the setting automatically after 30 seconds.

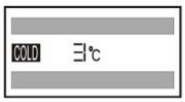

To adjust cold water temperature, press set 2 times to indicate current cold water temperature. Press set again and hold for 3 seconds, the temperature may be changed from 2 to 8℃. Default setting is 2.

To adjust surrounding brightness, press set 3 times to indicate current brightness level. Press the internal switch and hold for 3 seconds, the brightness level may be changed from 0 to 5. Default setting is 3. (0 = the darkest, 5 = the brightest)

To adjust the flow meter, press set 4 times to indicate the number of liters produced.
Press the internal switch and hold for 3 seconds, the number may be changed from 100 to 6000 liters.
Default setting is 1500 liters.

To adjust the day counter, press set 5 times to indicate the days the filters have been used.
Press the internal switch and hold for 3 seconds, the counter may be changed from 90 to 250 days.
Default setting is 180 days. Each press of the internal switch will increase one day.
When complete with setting, hold the internal switch again for three seconds to save the change.
Each change is saved automatically when no action is done after 30 seconds.
No action after 15 seconds while viewing each function, the screen returns to the normal status.

4. Energy Saving

Turn on

When energy saving is off,
hold the lock button and press set to turn on.

Turn off 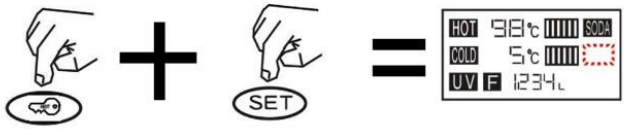

When energy saving is on,
hold the lock button and press set to turn off.

Energy saving will turn on or off the heating system according to the current setting of brightness leve
If the surrounding is darker than the current setting level, the heating system will turn off after 10 minutes.
If the surrounding is brighter than the current setting level, the heating system will activate after 1 minute.

When energy saving is on, the hot temperature appears as - -.
The color bar will not be appearing.

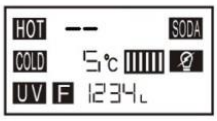

5. Reset Day Counter and Flow Meter

To reset the counters back to zero, hold the lock button and the internal switch for 3 seconds.
The unit will make 5 beeping sounds and clear the record of the counters.

6. Digit Messages

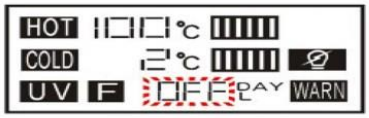

C101 Problem to the hot temperature control, not connected or over 105℃.
C102 Temperature rises too quickly or empty heating.
C103 Constant heating for 1 hour or not reaching the set temperature.
C201 Problem to the cold temperature control, not connected or over 70℃.
C202 Constant chilling for 8 hours or not reaching the set temperature.
C301 Leaking detected on the bottom plate.
C302 Water-in solenoid valve or related parts damaged, might cause leaking.
OFF Providing water for over 40 seconds or buttons jammed. Remove button jam to return to normal status.
FULL Drip collector is full over 3 seconds. Drain the collector to return to normal status.

7. Alarm and Malfunctions

When C101 to C302 appears, chilling and heating systems are both off.
WhenC101 to C202 appears, water may still be provided.
The unit will make short beeping sounds when malfunctions occur, please restart to stop the alarm.

When C301, C302 or OFF appears, water supply and power systems will be off.

This unit makes alarm sounds when the following conditions happen:
OFF, FULL, UV malfunction, and change filters.

The alarm will be 3 long beeps every 30 seconds and WARN flashes on the display.
To stop the alarm, just press set. WARN sign will be gone for 10 seconds.
After 10 seconds, WARN flashes again until the problem is solved.
During this time, if other problems are detected, the alarm will beep again.

8. Others

(1) When chilling reaches the set temperature, the fan will run for another five minutes.
(2) All settings are stored in memory.
(3) When errors happen to the LCD display, the unit will reset every five seconds till recover from the problems.
(4) Push "lock" button and "set" button, reheat function will be active. (Do not hold the lock button while pushing set button.)

FilterWater.com

FW-SMART BOTTLELESS COOLER

Cold , Room and Hot Water Dispenser with UV

Operation Manual

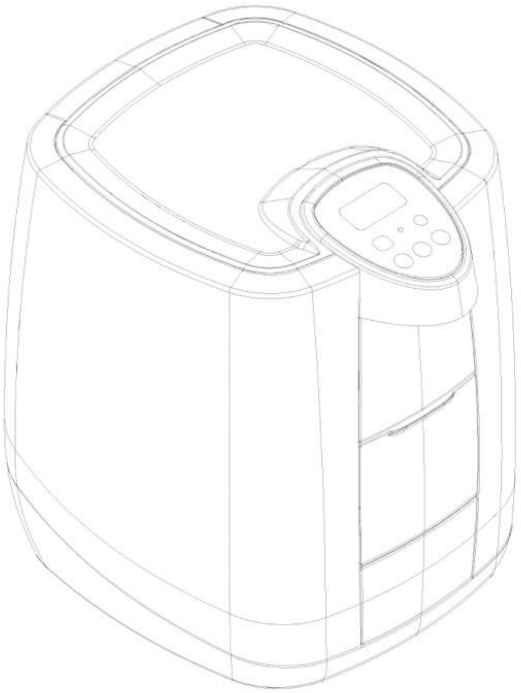

Contents	Page
Preface / Parts	1
Piping Installation	2
Directions for Use	3
Operation Method	4
Replacement of UV	5
Replacement of Filters	6
Safety Reminder	7
Cleaning & Maintenance	8,9
Operation and Setting	10,11,12,13
Problem Shoot	14

Please read these instructions completely before operating this unit

Preface / Parts

Before using this machine , we advise you to read this manual thoroughly .
Please follow the instructions to ensure proper operation and the lasting of the machine .

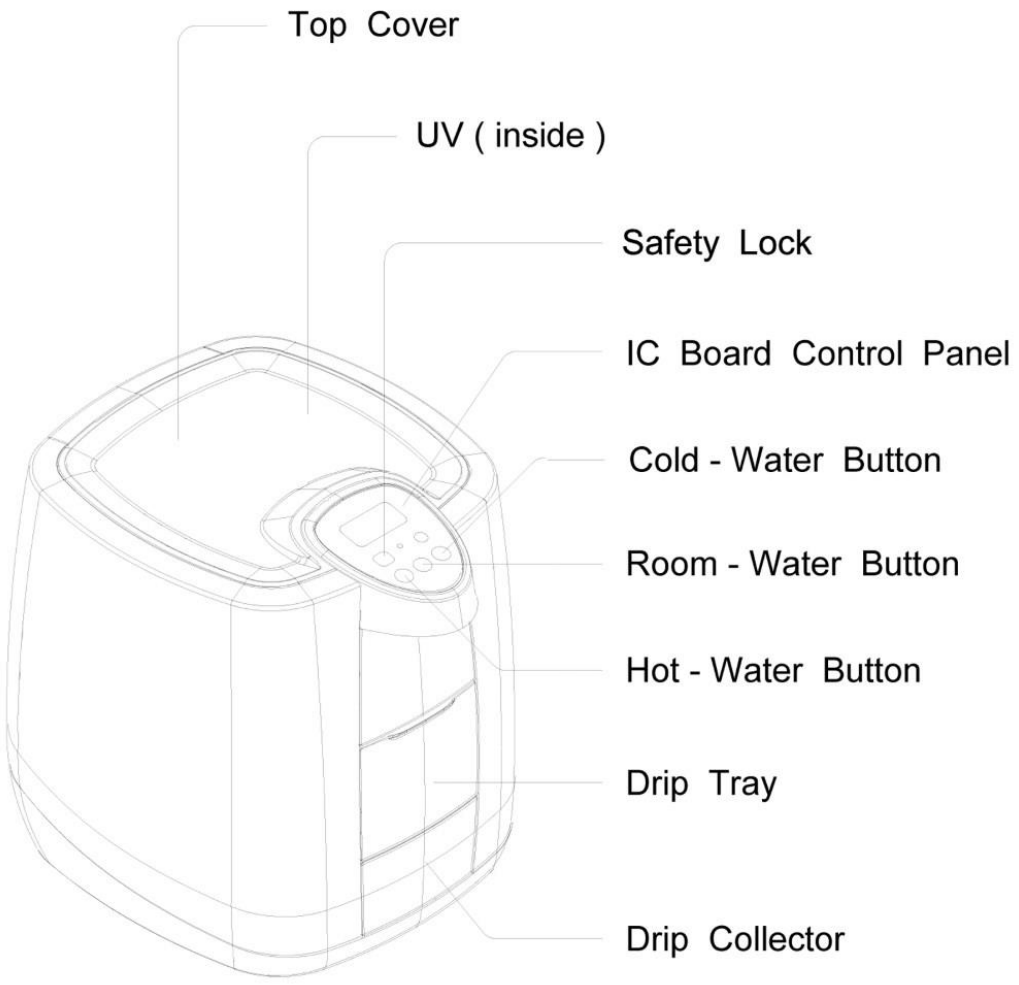

Piping Installation

1. Disassemble the original water tap .Then put on the tri-way socket and inlet ball valve . See drawing(A).

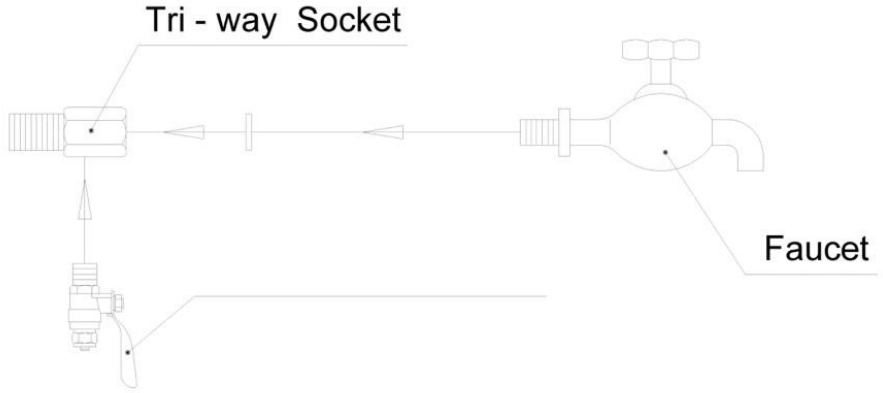

Drawing (A)

2. Connect the 1/4" PE water pipe between inlet ball valve and inlet connector . See drawing (B).

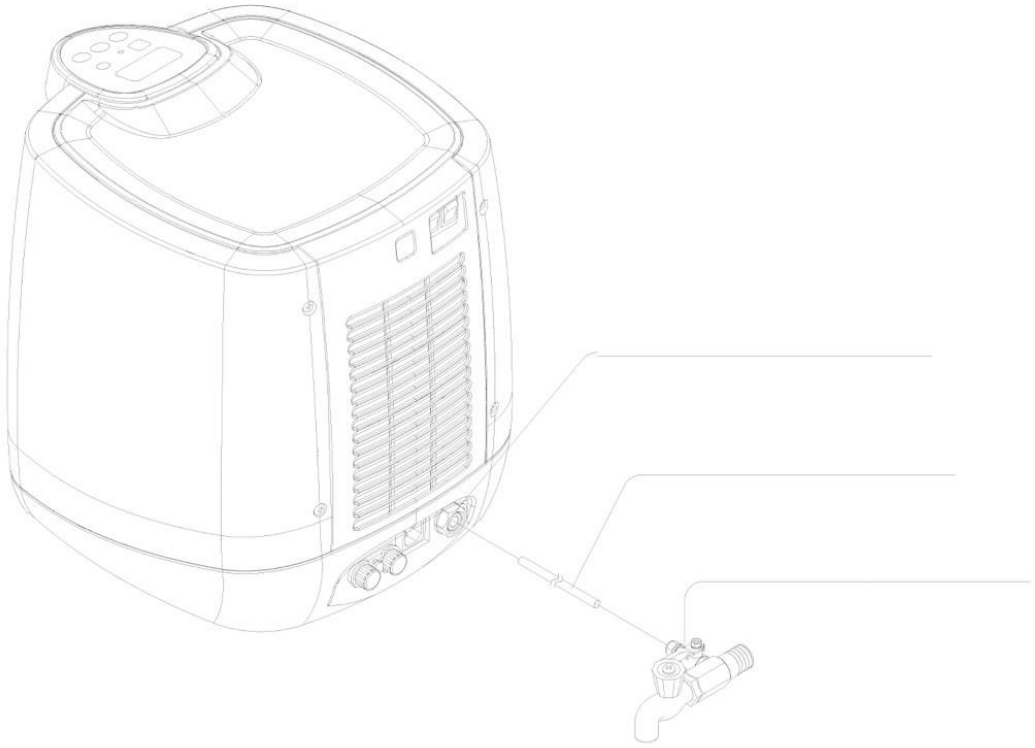

Drawing (B)

Directions for Use

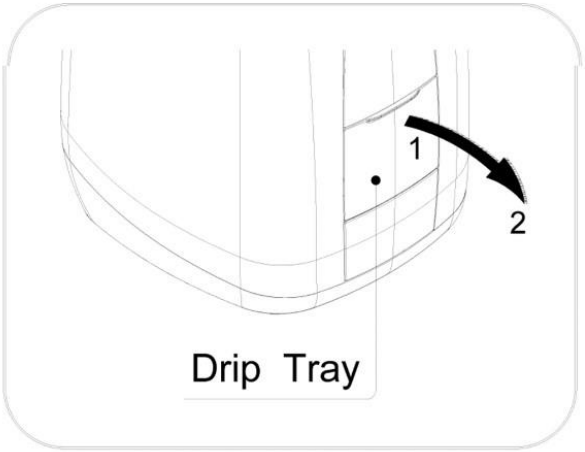

This unit may provide water to containers of all sizes. When filling a small container or cup, please lift down the drip tray as directed by the arrow in first picture. If the container is taller or bigger in size, please place it directly below the faucet to fill water.

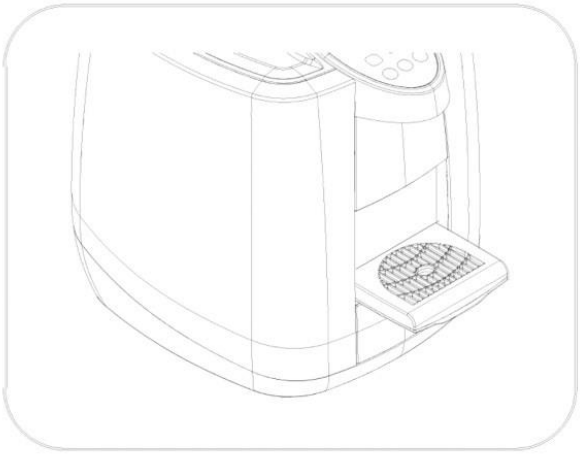

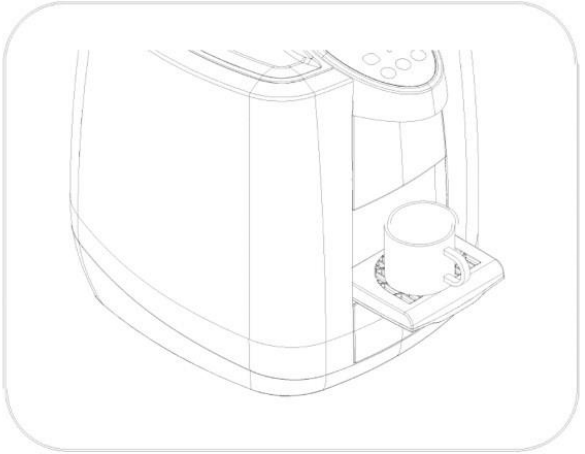

Operation Method

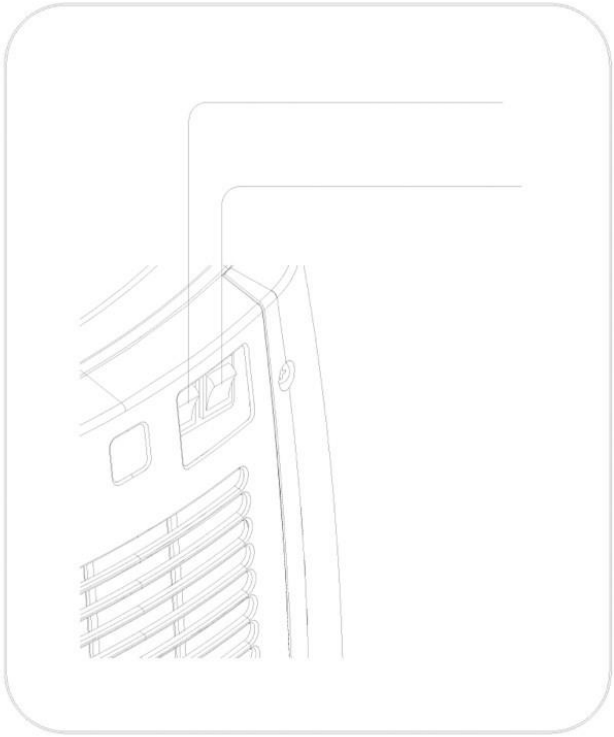

1. After completing water - in piping , the tanks inside will begin to fill with water. Please switch off both power switches on the back of the dispenser, then connect the machine to electricity.Try pressing the cold and hot water buttons to see if water comes out (takes about 2 to 3 minutes for water to flow out from cold water, 1 to 2 minutes from hot water).
   When water flows out of the dispenser, please press the water buttons until all water has been drained out. Wait till the tanks are filled with water again and let some water flow out for one to two minutes. The dispenser is ready for use.

2. Switch on both cold and hot power switches on the back, all indications will be appearing on the LCD screen, then the default setting comes next. Please see page 10 to 13 for more details on the LCD operation and settings.

3. To drink cold or room water, please press the cold or room water button.

4. When the temperature for hot water is not high enough, it will be reheated automatically for non-stop supply of hot water. After heating is done, press the safety lock first to unlock the hot water button, then press hot water button for hot water. The hot water button locks up automatically after 5 seconds.

Replacement of UV

Replacement of UV Lamp

When hearing the alarm from the dispenser, the WARN sign will flash to indicate malfunction. To replace UV lamp, please disconnect the machine from power before starting any procedures. First, press the button as directed in #1 to open the top cover. Second, follow steps #2 , #3 , and #4 to remove UV cover. Then, take out the damaged UV lamp and replace with a new one to complete replacement.

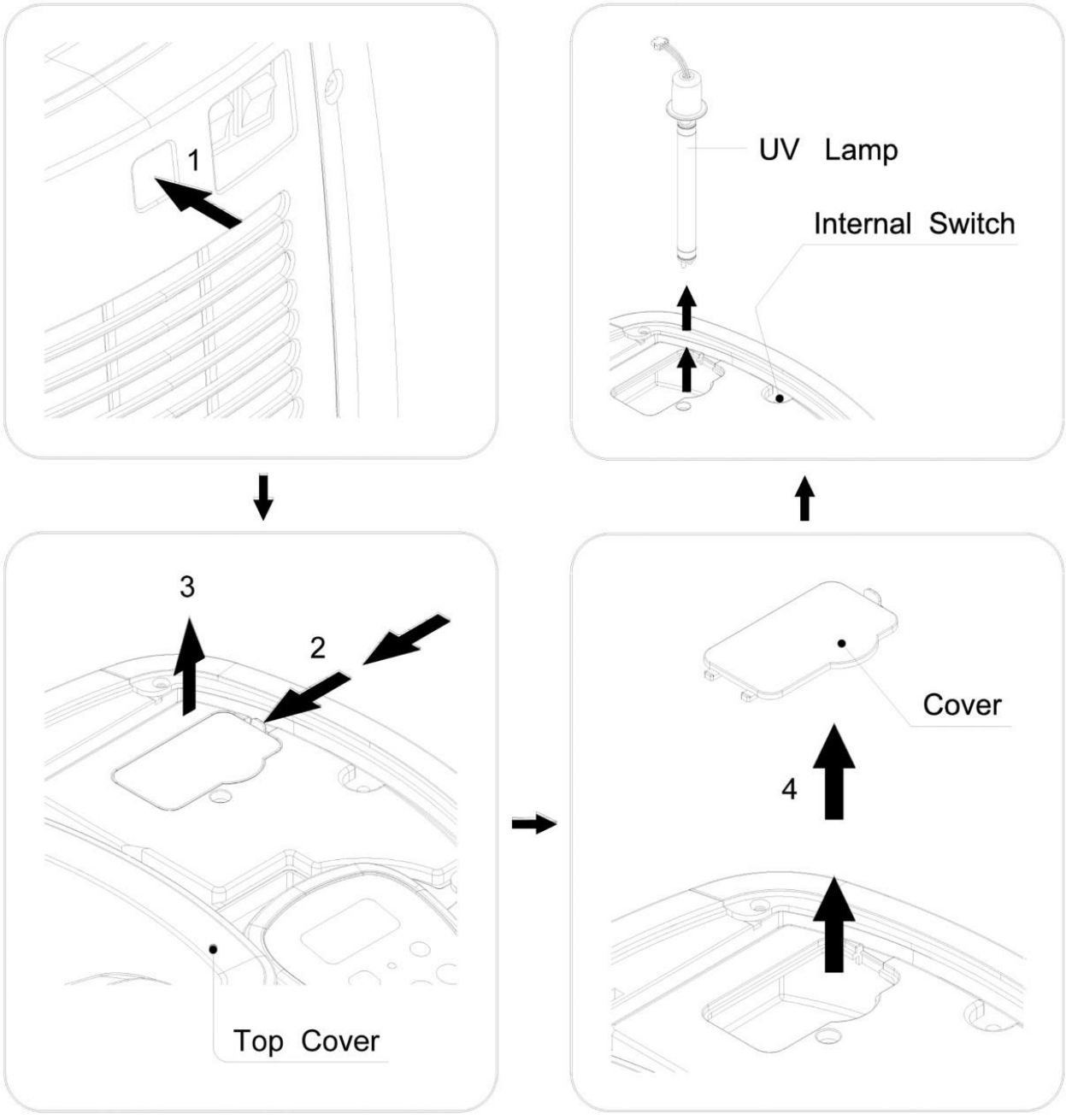

Replacement of Filters

If you have special requirements , different from the current default settings , reset according to the mains water quality and you demands.
While replacing the filter , please do not shut off mains water supply. Follow the order per the drawings that listed below.
Drawing 1, push the button in the rear panel in order to open the top cover.
Drawing 2, push the button in the filter head in order to let twin filters pop off.
Drawing 3, Twist the filter in clockwise direct to remove the filter.
Drawing 4, Twist the filter in counterclockwise direct to install the new filter.

After filter replacement is done , please reset day counter and flow meter.
To reset the counters back to zero , hold the lock button and the internal " set " switch for 3 seconds. Refet to the drawing 2 for the internal " set " switch.

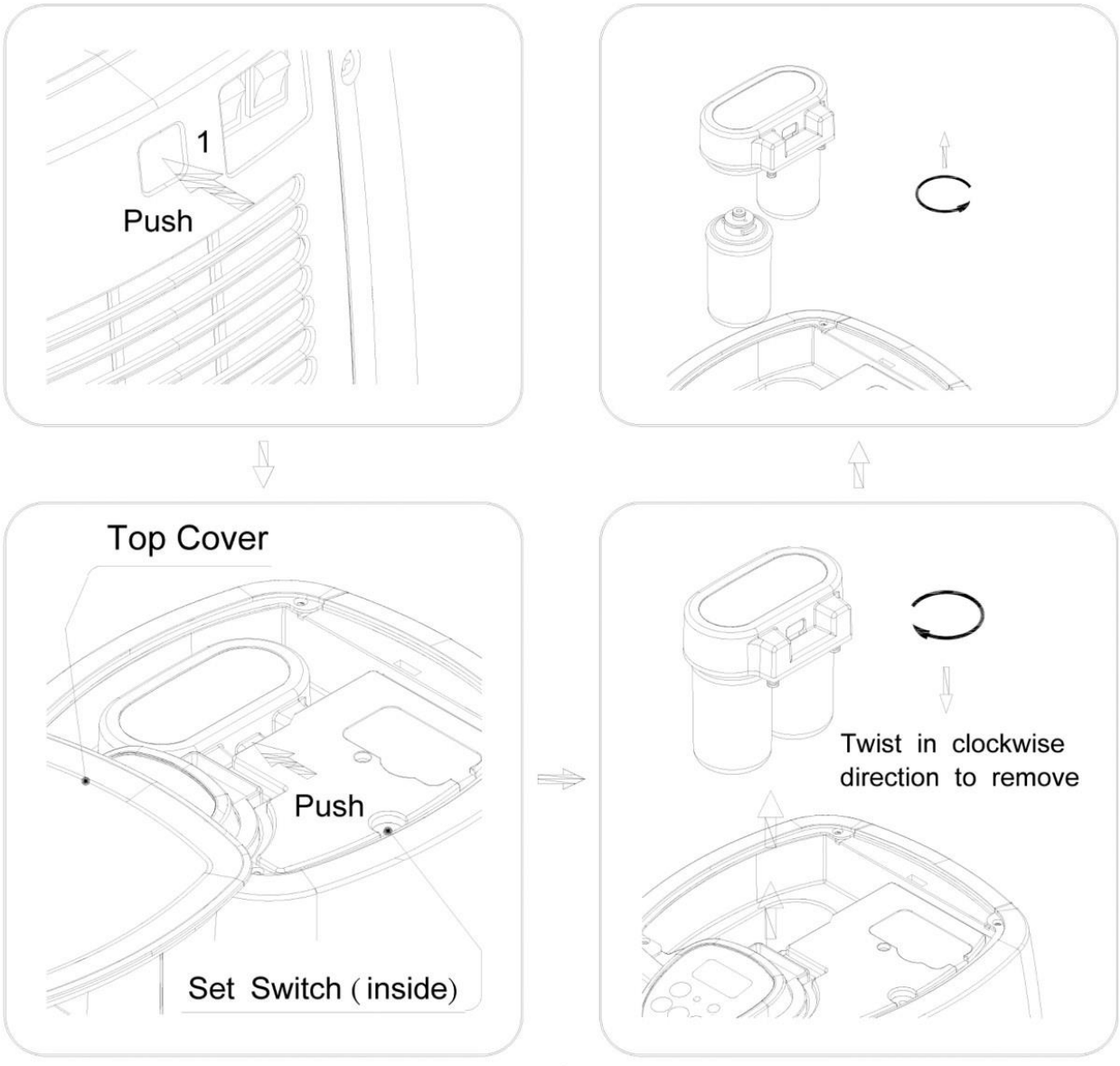

Safety Reminder

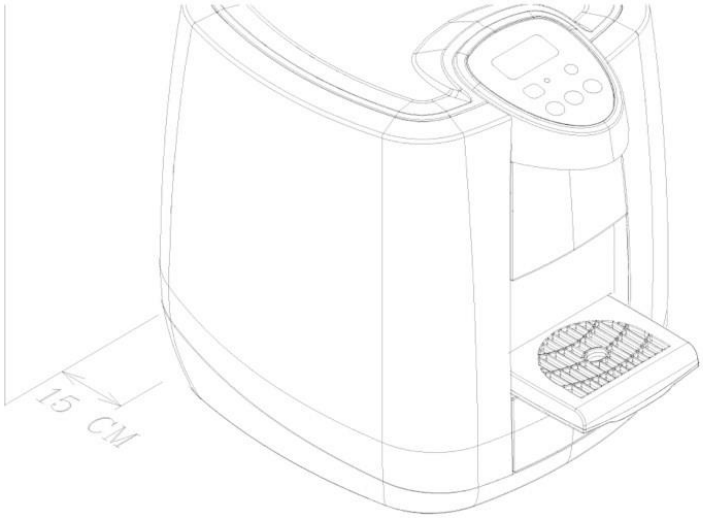

Leave a space no less than 15cm between the wall and dispenser.

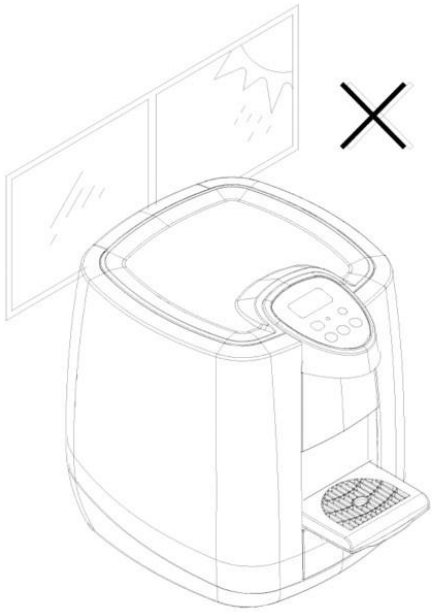

Keep the machine away from sunlight , heat , and wetness.

Be sure to use single outlet socket with correct power voltage. Plug the power cord directly into electrical socket .

Cleaning & Maintenance

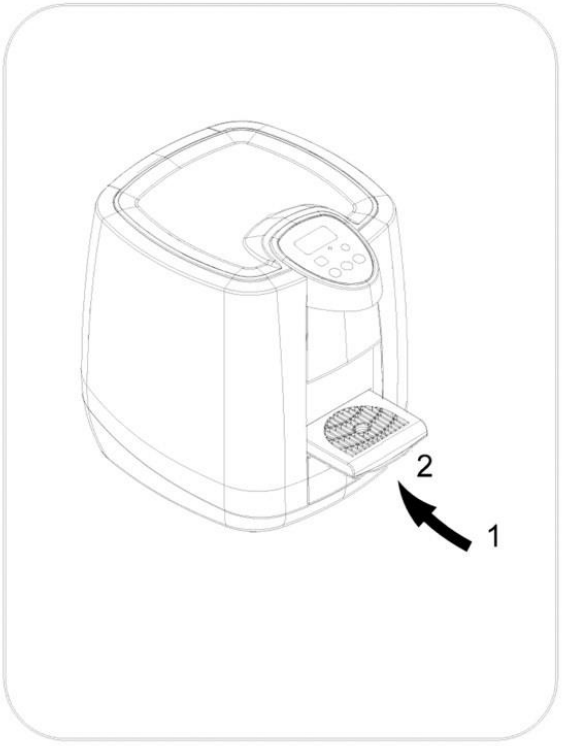

1. When drip collector is full, the machine will make 3 long beeping sounds every 30 seconds. The FULL sign will be shown on the display. Please place the drip tray back and press the drip collector to let it to pop out (shown by arrow A). Take out the drip collector and empty the water inside (shown by arrow B). Place it back and the dispenser will provide water again.

2. When the drip collector is full, water will not come out when pressing the water buttons.

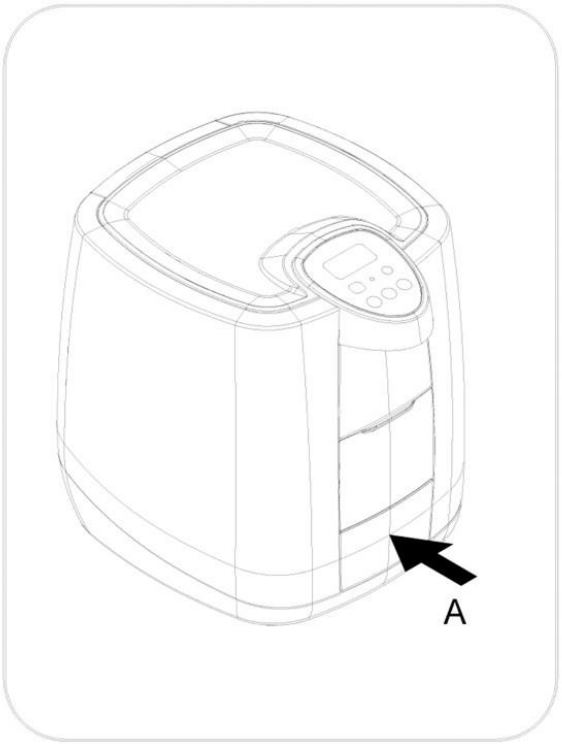

Cleaning & Maintenance

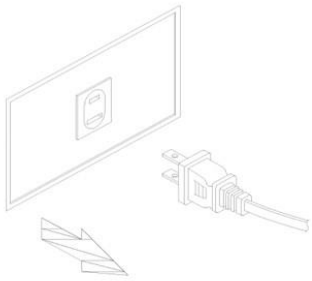

1. Please make sure the machine is completely disconnected from electricity before cleaning.

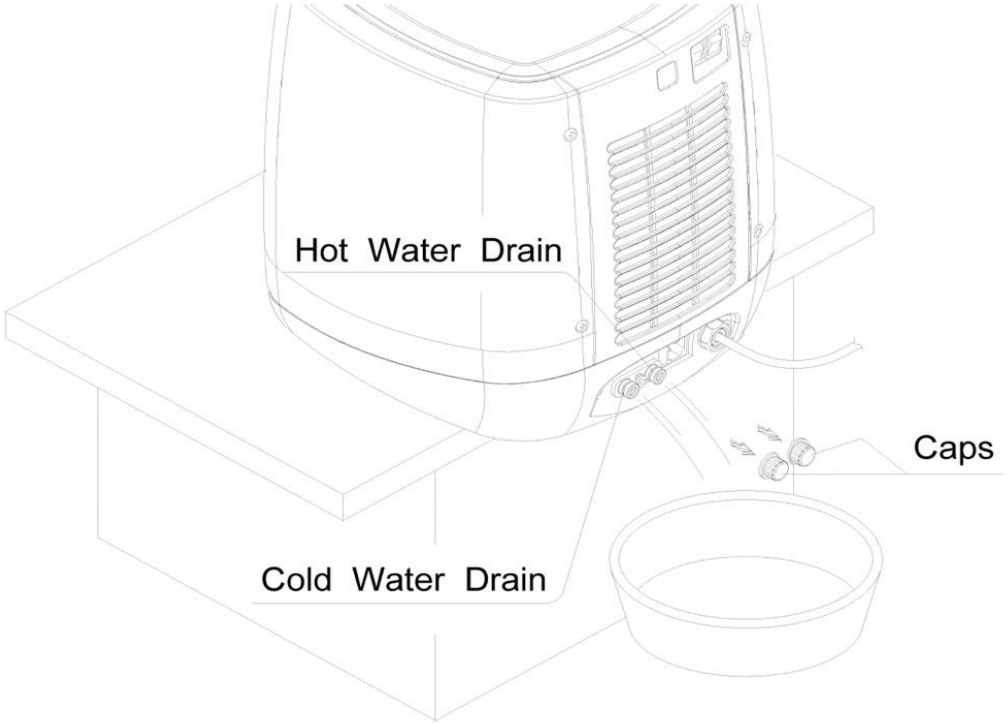

2. Remove the caps on top of the hot water and cold water drains. The remaining water in the tanks will drain out. Cleaning may start when both tanks are emptied. Please put the caps back when cleaning is done.

Caution: For your safety , please contact your distributor or qualified technician for repairment when the water dispenser is damaged.

Mailing Address:

FilterWater.com

P.O.Box 968

Southampton, PA 18966

USA

http://www.FilterWater.com

Tel. (800) 439-0263

Fax (215) 354-0304

Email: Sales@filterwater.com